www.ThePharmaJournal.com

The Pharma Innovation

ISSN (E): 2277- 7695
ISSN (P): 2349-8242
NAAS Rating: 5.23
TPI 2021; SP-10(12): 2010-2014

www.thepharmajournal.com
Received: 01-10-2021
Accepted: 03-11-2021

Saurabh Kumar Kulhariya
M.Tech, Department of Farm Machinery and Power Engineering, IGKV, Raipur, Chhattisgarh, India

Dr. RK Naik
Associate Professor, Department of Farm Machinery and Power Engineering, IGKV, Raipur, Chhattisgarh, India

Shambhu Singh
PhD, Department of Farm Machinery and Power Engineering, IGKV, Raipur, Chhattisgarh, India

Pushpraj Diwan
PhD, Department of Farm Machinery and Power Engineering, IGKV, Raipur, Chhattisgarh, India

Aman Kumar
PhD, Department of Farm Machinery and Power Engineering, IGKV, Raipur, Chhattisgarh, India

Hemshanker
M.Tech, Department of Farm Machinery and Power Engineering, IGKV, Raipur, Chhattisgarh, India

Corresponding Author
Saurabh Kumar Kulhariya
M.Tech, Department of Farm Machinery and Power Engineering, IGKV, Raipur, Raipur, Chhattisgarh, India

Design of power tiller operated vegetable transplanter

Saurabh Kumar Kulhariya, Dr. RK Naik, Shambhu Singh, Pushpraj Diwan, Aman Kumar and Hemshanker

Abstract
In India vegetable crops are grown on a large area as it is the second largest producer of fruits and vegetables in the world. This study is carried out to design and fabrication of power tiller operated vegetable transplanter for multi crop and using the panel of revied countries over 2019–2021 at Department of Farm Machinery and Power Engineering FAE, SVCAET IGKV Raipur, Chhattisgarh, India. The seedling transplanter machine is an innovative, labour-saving technology. The cell type metring plate to deliver nursery prepare seedling on dropping tube. The metering cells connected in a bevel gear so that they feed manually through the transplanter and they are operated by Husqvarna TF 545D Power tiller 9 HP / 6.6 kW @ 3600 rpm engine operated by diesel. All while run in forward direction the transplanter opens a narrow furrow. the seedling continuously falls on tube and goes down into the furrow, and then the seedling plants are covered soil by furrow opener and ridger maker. At the start of a row the nursery prepare seedling are continuously fall down into the furrow by gravity force in in front of ridger maker along with soil cover on plants and then run the transplanter forward. The transplanter all will follow each other into the field. The main objective of this paper to design and fabricate of several parts of the transplanter. The comprehensive dimension of vegetable transplanter was 1200×820×300 mm. Mild steel was used to fabricate frame, revolving metering mechanism, ground wheel, dropping tube, furrow opener and other parts of vegetable transplanter. After the study conducted, it was observed for the effective and precise operations, some improvements are needed to be made regarding the metering mechanism to convert it into the auto feed system.

Keywords: vegetable transplanter, metring plate, bevel gear, seedlings, furrow, mild steel

Introduction
Vegetable transplanting are now carried out all the countries. While transplanting is done manually, roots are severely damaged in the process of transplanting. So, the plants take longer to establish their roots after transplanting. Transplanting of vegetable seedling manually is very tiresome and labour consuming as the operation is done in a bending posture. High labour requirement and shortage of labour during peak transplanting season causes delay in transplanting and affects timely operation. A survey was carried out to assess mechanization gaps in raising seedling, planting and transplanting of vegetable crops. The results of the survey indicated that there was a mechanization gap in area of transplanting of vegetable crops. Mechanized transplanting of vegetable is not widely practiced in India and most of the developing countries by Raheman and Kumar (2008) [1]. The plant removal and plant setting are important factors to be considered while designing vegetable transplanters. The main problem for researchers in developing to improve the cultural practices transplanter, is the technology of how to plant the seedling from the tray. The semi-automatic transplanter requires either plug manually or plant seedlings. Removal of the individual seedlings from the trays by manually at rates of 3 to 5 plants s^{-1} is a challenging task. The initial investment on production of seedling is high and the mechanisms employed for the removal of seedlings from tray are complex. In India, past studies reveal that fully automatic vegetable transplanters capable of feeding and metering individual push type seedling ball removal have not yet been developed. The existing system of vegetable cultivation is to transplant the seedling manually with the help of women labours. The vegetable cultivated area is increasing day by day, and the vegetable seedling needs to be transplanted within a short period of 25 to 30 days. Nowadays labour is not available for doing this job due to drudgery involved in this operation. Several attempts have been made elsewhere in the world and prototype have been brought out. In one model the seedlings were pushed into a device that rotated them to a vertical orientation after which they were transported pneumatically to preformed holes in the ground. Another model has a vertical plunger that pushes plant cell upward out of the tray, where they are

grasped by mechanical grippers before being transported to the ground. The tiller operated vegetable transplanter transplanting system is an innovative, labour-saving technology. The cell type metring plate to deliver nursery prepare seedling on dropping tube. The metering cells connected in a bevel gear so that they feed manually through the transplanter and they are operated through Husqvarna TF 545D Power tiller 9 HP. All while run in forward direction the transplanter opens a narrow furrow. The seedling continuously falls on tube and goes down into the furrow, and then the seedling plants are covered soil by Furrow opener and ridger maker. At the start of a row the nursery prepare seedling are continuously fall down into the furrow by gravity force in in front of ridger maker along with soil cover on plants and then run the transplanter forward. The transplanter all will follow each other into the field. We built a power tiller operated vegetable transplanter for transplanting the seedlings in the field.

Power-tiller Mounted Transplanter

Vegetable transplanting is presently carried out only manually in India. In the process of manual transplanting, roots are severely damaged and the plants take longer time to establish their roots. Hence vegetable growers have moved on to manual transplanting of seedling. Mechanization of vegetable transplanting is the need of the hour. Sivakumar (2014) [2] also developed the semi-automatic transplanters in India. They are not suitable for continuous operation over a long period of time. This work was carried out to systematically design and develop a semi-automatic vegetable transplanter suitable for vegetable crop seedlings. In developing a semi-automatic vegetable transplanter.

Problem definition and objective

The traditional method of transplanting is labour intensive, hazardous with low per acre plantation of plants and time & cost consuming. Due to these factors the completion of seedling cultivation suffers within the optimum transplanting period consequently farmers face the problem of low per acre production with high production cost. These obstacles can be overcome by mechanical transplanting technique. A vegetable transplanter is a specialized machine used to transplant seedlings in the field. It facilitates the whole formation, putting of seedling in the hole by cell metering, covering the soil, carrying the seedling along with machine to increase the forward speed of operation which results in higher capacity and increase the efficiency of the labour at reduced efforts. The main objectives of our project were to Turn hours of labour into minutes, extremely versatile use on wide variety of vegetable crops, Way less work than transplanting by hand and just pull and plant.

Seedling transplanter parameters

The requirements for fabricating the vegetable transplanter are Selection of suitable size of seedling, base material, power source, and suitable bearing. The fabrication steps involve the following parameters by Sivakumar, 2014 [2].

- Fabrication of base for the seedling transplanter as per the design requirement.
- Fabrication of transplanter and its body parts.
- Assembly of fabricated parts.
- Adjusting all the fabricated parts for accuracy.

Determination of number of cells on metering plate

The number of cells of the metering unit was calculated using the following formula (Ningthoujam *et al*., 2016) [3].

$$I = (c \times t)/a \quad \ldots (1)$$

Where,
I = No. of cells on the metering device;
c = circumference of drive wheel, cm;
t = speed ratio = 1.7
a = plant to plant spacing = 45 cm. Taking,
I = (π×50 × 1.7) / 45
I = 5.9 ≈ 6

Cell height and diameter of metering mechanism

The cell width of revolving magazine type metering mechanism was selected on the basis of spread diameter of plant of vegetable crops. The size of the canopy of plug seedling was specified by the critical pipe through which a healthy plug seedling suitable for transplanting can pass vertically without getting stuck. The diameter of seedling feed tubes and the metering magazine cells should be greater than the critical canopy diameter of seedling to avoid any blockage in seedling feed tubes. Height of the revolving magazine type metering mechanism was elected on the basis of height of seedlings of vegetable crops. Cell diameter of 75 mm and cell height of 150 mm is selected in the present investigation.

Design of revolving metering mechanism

The revolving metering mechanism depend upon Speed of the machine (Vm) and selected plant to- plant distance Ag), number of cells on revolving mechanism shown in fig. (1). The frequency rotation (rpm) of revolving magazine of the machine is calculated using the following formula (Mahesh *et al*., 2011) [4].

$$n = (60 \times Vm)/(Z \times Ag) \quad \ldots (2)$$

Where,
n = number of revolutions of revolving magazine,
V_m = speed of the machine, $m.s^{-1}$,
Z = number of cells on revolving magazine
A_g = plant-to-plant distance between seedlings, m.
Taking
$n = (60 \times Vm)/(Z \times Ag)$
n = (60×0.27)/ (6×45)
n = 6

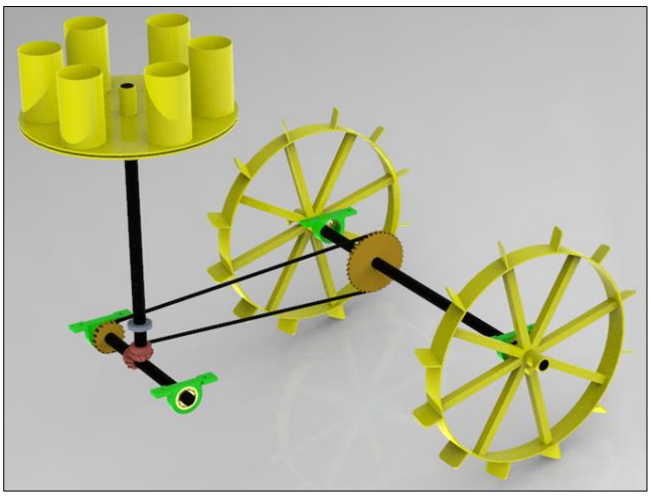

Fig 1: Revolving type metering mechanism of developed vegetable transplanter

Power transmission system

Drive wheel design

The ground wheel provides the power for operation the seedling metering mechanism. Two wheels have been used in transplanter which is the same size and made up of cast iron. The width of wheel was selected to be 50 mm and diameter 500 mm and thickness of rim 5 mm, The thickness of rim was calculated by following relationship (Pandya and Shah, 1962) [5]

$$T = (D/200) + 3.175 \quad \ldots (3)$$

T = 500/200 + 3.175

T = 5.6 ≈ 5

Where,

T = thickness of rim, mm

D = Diameter of ground wheel, mm

Rim width of ground wheel was chosen 50 mm as it ranges from 30 to 50 mm in case of planter. Wheel rim was made from cast iron and having 12 numbers of lugs each one made with case iron having 50 mm×50mm section. The dimension of ground wheel. The revolving magazine type metering mechanism as consist of 3 shaft one each for metering shaft, ground wheel shaft and revolving shaft.

The tangential force required to rotate the wheel is calculated by using the following formula

$$F = C \times B \times L \times G \times \tan\theta \quad \ldots (4)$$

Where

C = coefficient of cohesion of soil for friable range

B = width of ground wheel, cm

L = length of contact of ground wheel, cm

G = Weight on ground wheel, kg

θ = angle of soil internal friction, degree

Taking

C = 0.02, B = 5, L = (π×50/10), G = 60 kg/f and θ = 40

F = 0.02×5× (π×50/10) ×60×tan40°

But radius of ground wheel was 25 cm

Torque = 1.31× 25

Torque = 32.95 kg/f- cm

Chain and Sprocket Arrangement

In power transmission system chain, sprockets and gears are used, sprockets are positive drive and transmit the power to the driven shaft without any slippage. Sprockets are selected according to the speed ratio and power requirement.

Length of chain can be determined by using the following formula according to the Khurmi (2005) [6].

$$L = \frac{P}{2}(T_1 + T_2) + 2X + \left\{\frac{\left\{\frac{p}{2}\operatorname{cosec}\left(\frac{180°}{T_1}\right) - \frac{p}{2}\operatorname{cosec}\left(\frac{180°}{T_2}\right)\right\}}{X}\right\} \quad \ldots (5)$$

Where,

P = Pitch of chain

T_2 = No. of teeth in driven sprocket

T_1 = No. of teeth in driver sprocket

X = Distance between shaft

Let,

p = 2.5, x =70, T_1 = 21, T_2 = 36

Then,

$$L = \frac{2.5}{2}(21 + 36) + 140 + \left\{\frac{\left\{\frac{2.5}{2}\operatorname{cosec}\left(\frac{180°}{21}\right) - \frac{2.5}{2}\operatorname{cosec}\left(\frac{180°}{36}\right)\right\}}{70}\right\}$$

L = 95

Number of link = 95

Length of chain = 95×2.5

Length of chain = 237.5 cm.

Fabrication of the model

Welding is the important process involved in the fabrication. The necessary steel material is cut down for the required dimension. The base parts are welded using arc welding machine. A thermo-mechanical performance study for Wire and Arc Additive Layer Manufacture by Ding *et al*., (2011) [7]. Metal frame is cut down for the required dimension. The components like DC motor base of sheet metal and metal frame are weld to together. Manufacturing processes are the steps to through which raw materials are transformed into a final product. Manufacturing processes can be treating (such as heat treating or coating), machining, or reshaping the material. The manufacturing process also includes tests and checks for quality assurance during and after the manufacturing, and planning the production process prior to manufacturing. The base frame which acts a chassis of vehicle is fabricated with the help of square tubes and channels by metal cutting and metal joining process called welding. The metal wheel with spikes at its surface is mounted at the rear axle of implement to obtain a stabilized motion on the crop upland field. The rear axle shaft gets attached to base frame with the help of bearing supported ends. At the front-end portion of implement have seedling metering device which is connected as a V-shape frame to rear end trail point of power tiller prime unit of clearance between them. The plantlet passage tray which is wide at one end to load the seedling plantlets and it is narrow at its other end, this narrowed end is placed near the front axle of implement. The handle bar is provided at the back side of chassis for handling the implement to perform transplanting operation.

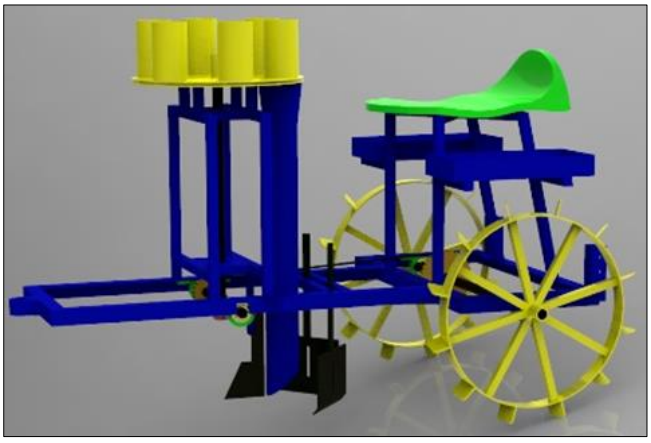

Fig 2: 3-D view of developed transplanter

Initially, ready-to-transplant seedling plantlets are placed in the loading chamber of the plantlet loading tray, the free end of the bundle is released from the bundle, and it is fixed to the field. After making all of the preliminary arrangements, the operator exerts a pulling power to the entire vehicle while holding it by the handle bar. This force aids in the loosening of the paper pot taps from the bundle; the loading tray's

narrow passage allows the paper pot tape to flow in a straight path and be transplanted to the field. To secure the transplanted crop to the field, the slanted front wheel applies an external load.

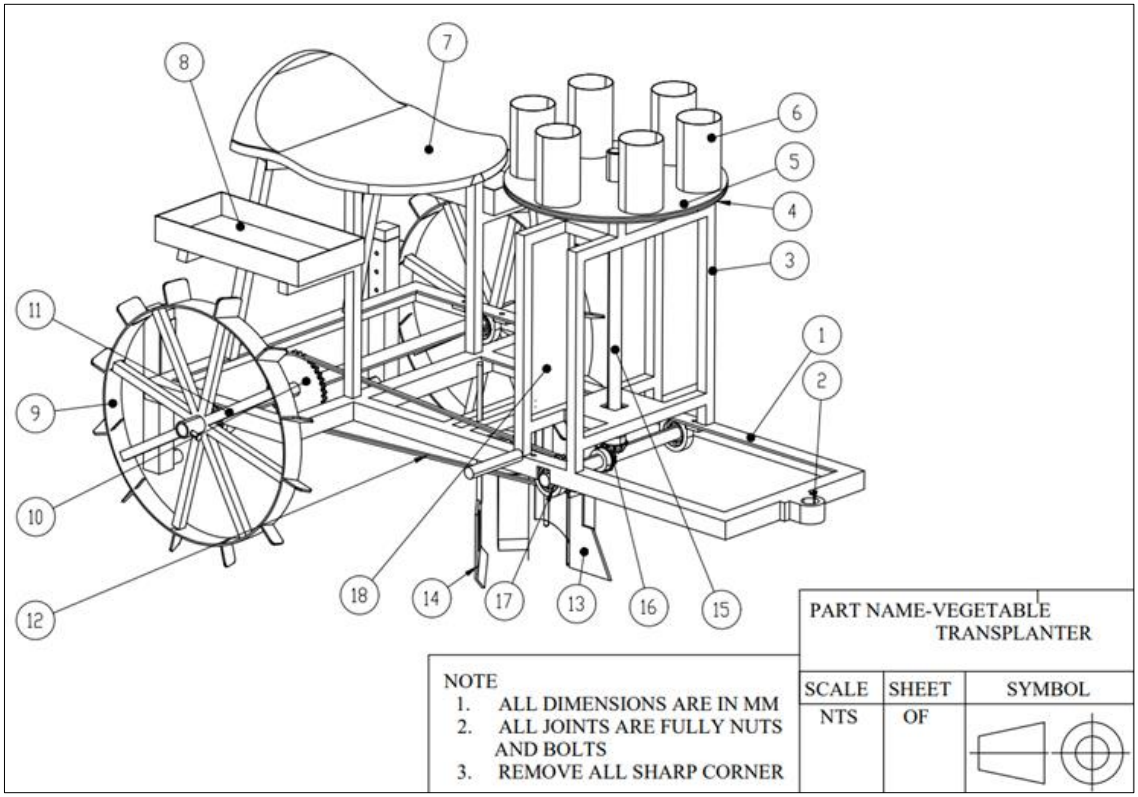

Fig 3: Pictorial view of developed multi crop vegetable transplanter

S.N.	Parts	S.N.	Parts
1	Maine frame	10	Chain sprocket
2	Hitch point	11	Ground wheel shaft
3	Metering frame	12	Chain links
4	Stationary plate	13	Furrow opener
5	Revolving plate	14	Ridger maker
6	Cell	15	Revolving shaft
7	Seat	16	Bevel gear
8	Seedling holding tray	17	Ucp
9	Ground wheel	18	Dropping tube

Fig 4: Developed transplanter in actual field working condition attached with power tiller

A vegetable transplanter is a specialised machine that is used in the field to transplant plants. A typical paper pot transplanter consists of a seedling tray that resembles a shed roof and a mat type paper pot nursery. A seedling tray shifter that moves the seedling tray around like a typewriter carriage. Numerous seedling pickup forks that pick up seedlings from a mat type nursery on the seedling tray and place them in the ground as though they were picked up between human fingers. Machine transplantation with seedling transplanters saves time and effort compared to manual transplanting. It raises the maximum area a person can plant per day from 700 to 10,000 m^2.

Conclusion

The vegetable transplanting machine worked satisfactorily. But, the improvements to be done before introducing to the farmers. The machine is driven by power tiller to increase the performances. Machine can be developed to transplant the two rows. Weight of the machine should be reduced by removing the sprocket, chains. The depot must have the thin mud layer for easy removal of seedlings. It can be used for transplanting the vegetable crops such as potato, tomato, brinjal etc.

References

1. Kumar GP, Raheman H. Vegetable transplanters for use in developing countries a review. International Journal of Vegetable Science. 2008;14(3):232-255.
2. Sivakumar S. Development of a tractor mounted

automatic vegetable transplanter (Doctoral dissertation, Tamil Nadu Agricultural University Coimbatore), 2014.
3. Ningthoujam B, Singh V, Nilatkar DK. International Journal of Applied Science and Engineering. 2016;4(2):111-123.
4. Mahesh N, Dhaliwal IS, Gursahib SM. Development and evaluation of a two-row revolving magazine type vegetable transplanter. Journal of Agricultural. Engineering. 2011;48(3):1-7.
5. Pandya NC, Shah CS. Elements of Machine Design. Charotar Book Stall, Juloi Sadan, Anand, India, 1962, 275-285.
6. Khurmi RS. Theory of Machine. Eurisia Publishing House, 2005.
7. Ding J, Colegrove P, Mehnen J, Ganguly S, Almeida PS, Wang F, *et al*. Thermo-mechanical analysis of Wire and Arc Additive Layer Manufacturing process on large multi-layer parts. Computational Materials Science. 2011;50(12):3315-3322.